Models: RPC-4.0FSR, RPC-5.0FSR and RPC-6.0FSR

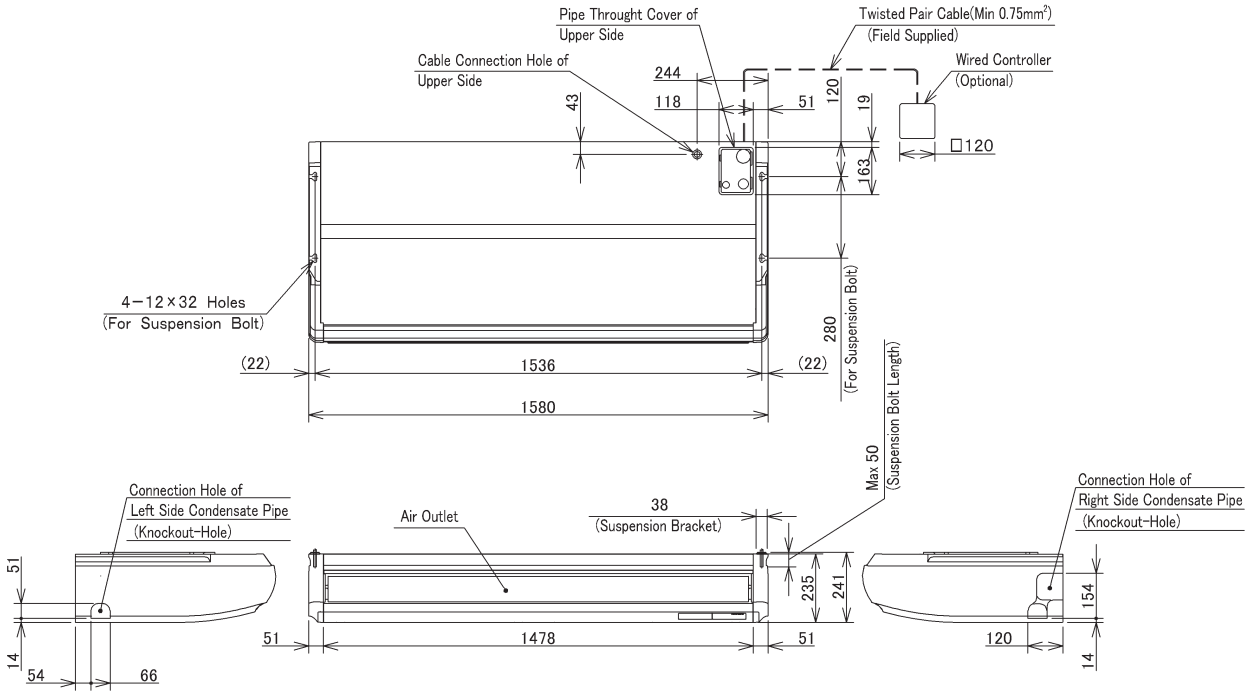

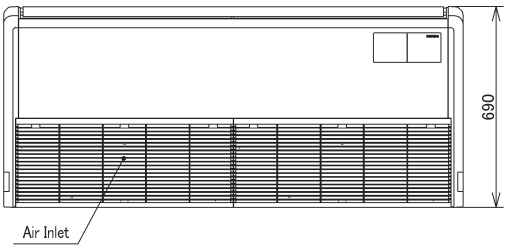

Pipe Connection

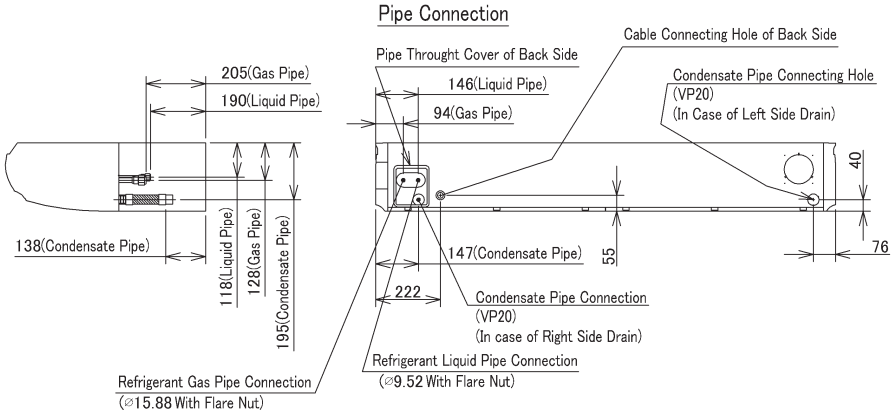
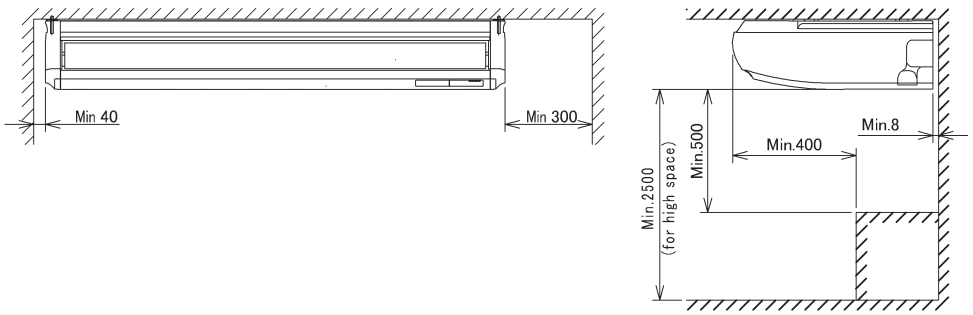
Service Space