CONSTRUCTION AND DIMENSIONAL DIAGRAM

MODEL RAF-25NXA1 RAF-35NXA1

Unit : mm

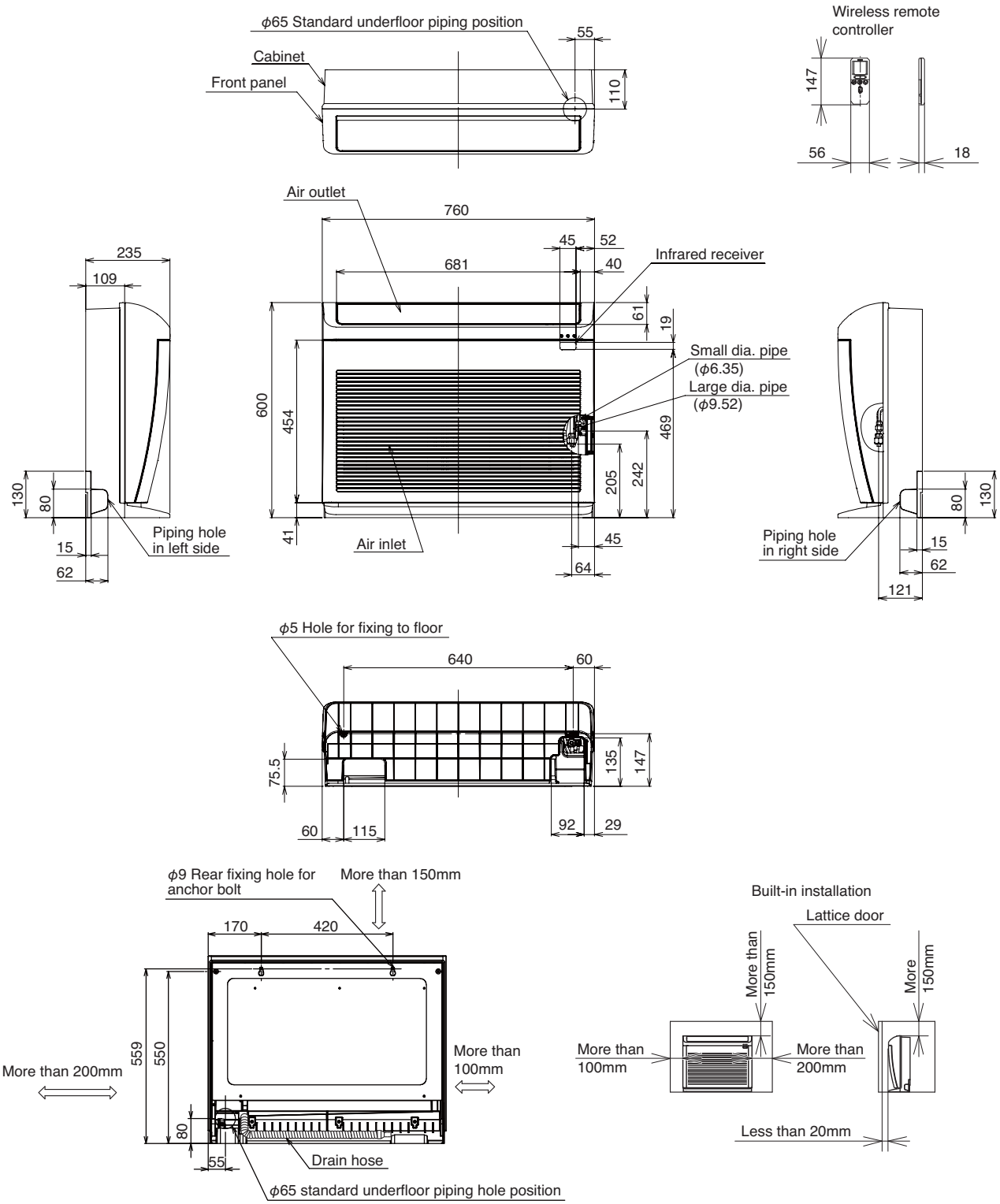

Cautions:
1. Use insulated pipes for both large and small diameters.
2. Use pipes of no more than 20m length.
3. Make sure the difference in heights between the indoor and outdoor units is 10m.
4. For built-in installation, make sure that the infrared receiver and indicator are not blocked.
5. Pipes can be laid out from the right, bottom or rear, when the unit is viewed from front.
6. Keep the clearance shown by ⟺ for installation.
7. For built-in installation, keep the vertical deflector at top air outlet as flat as possible.
   If it is inclined too much, heat will be trapped in the unit, which could cause faulty room temperature control.
8. An F-cable 1.6mm or 2.0mm dia. x 2 (control side) is used for the connection cable.

MODEL RAC-25NXA1 RAC-35NXA1

OUTDOOR UNIT
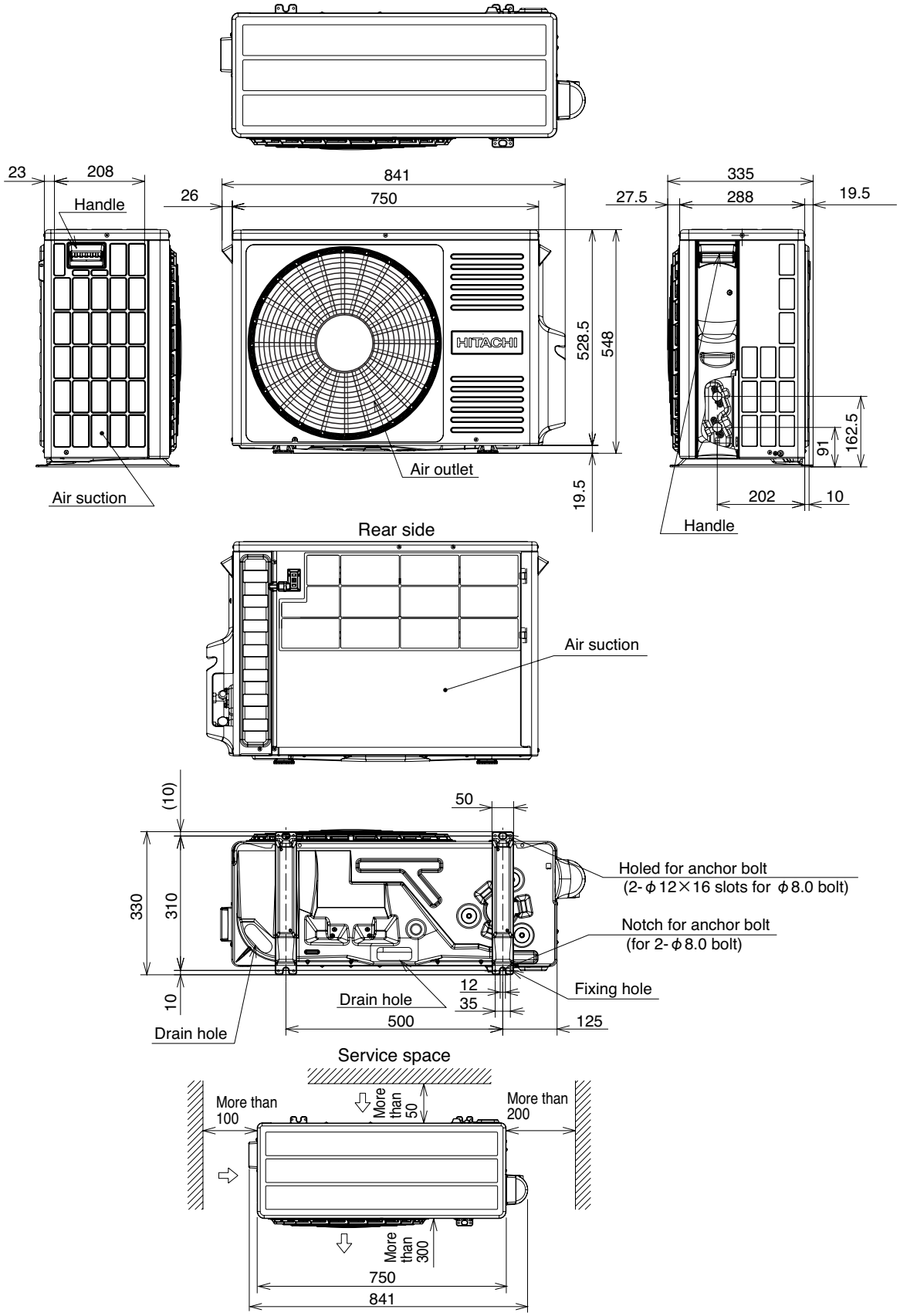
Unit : mm